Improving Summer Chinook Hatchery Broodstock Survival – Lower Puntledge Hatchery Chilled Acclimation System

11.Pun.01

Prepared by:

E. Guimond
473 Leighton Ave.
Courtenay, BC V9N 2Z5
guimonde@telus.net

Prepared for:

Comox Valley Project Watershed Society
PO Box 3007
Courtenay, BC V9N 5N3

Prepared with financial support of:

BC Hydro Bridge Coastal Fish and Wildlife Restoration Program
on behalf of its program partners BC Hydro,
the Province of BC, and Fisheries and Oceans Canada

March 2013

EXECUTIVE SUMMARY

Over the past several decades, summer Chinook broodstock being held during the summer months at Fisheries and Oceans Canada (DFO) Hatcheries in the Puntledge River have experienced high pre-spawn mortality (~50%) due to the warm temperatures of their surface water supplies.

In 2004, a catastrophic incident that resulted in the near complete loss of all broodstock prompted DFO Puntledge Hatchery to modify their summer Chinook broodstock collection program. Adult summer Chinook are now intercepted at the lower Puntledge Hatchery and transported to other DFO hatcheries in the Mid Vancouver Island region that have cooler water supplies. Holding in cooler water increases pre-spawning survival of broodstock from 50% to over 95%, and improves gamete viability and survival.

Once water temperatures at Puntledge Hatchery reach 17-18 ^{o}C, capture and transporting becomes more stressful on the adults and may increase pre-spawn mortality. In order to take full advantage of existing cool water holding facilities, funding was provided from BC Hydro's Fish and Wildlife Compensation Program (FWCP) in 2012 to assist Puntledge Hatchery in purchasing equipment and completing modifications at the lower facility to allow staff to safely capture and handle adult summer Chinook for transport when river temperatures are over 17-18 ^{o}C. A new 5 HP portable water chiller was purchased and will be used to cool water for small batches of adult chinook so they can be moved to a transport truck using a new aluminum fish brailer. The chiller/brailer system will significantly reduce the amount of stress on the fish when they are handled for inspection and transport.

TABLE OF CONTENTS

APPENDICES

LIST OF FIGURES

1 INTRODUCTION

Since construction of the Puntledge River hydroelectric facilities in 1912, and expansion in the 1950's, fish populations in the river have been subjected to a variety of footprint impacts, as described in the Fish and Wildlife Compensation Program (FWCP) Puntledge River Watershed Salmonid Action Plan (BC Hydro 2011). Puntledge summer-run Chinook salmon experienced significant declines after expansion, from a pre-expansion escapement level of 3000 to an average of 400 through the 1960s and early 1970s. Despite over 50 years of considerable effort to rebuild this population to pre-hydro expansion levels, summer Chinook returns, although improving, remain well below target escapements. The population continues to be under significant threat due to loss of spring freshet flows, limited suitable spawning habitat, reduced or delayed access to Comox Lake, high river water temperature, and seal predation.

The Puntledge River system is one of a few rivers on the east coast of Vancouver Island that supports both a summer and a fall run of Chinook salmon. The two Puntledge Chinook stocks likely originated from the same population, but the summer Chinook are now genetically distinct from the fall Chinook and from other Chinook stocks in the Georgia Basin. They have been classified as a unique conservation unit under Fisheries and Oceans Canada (DFO) Wild Salmon Policy. Predictive modeling of summer Chinook recovery illustrates that hatchery enhancement, combined with other actions in the watershed will continue to be a key component to the overall recovery of the summer Chinook population to historical levels (Guimond and Sheng 2009). These actions are also identified in the FWCP Salmonid Action Plan as a priority action for Puntledge summer Chinook recovery (BC Hydro 2011).

1.1 Background

Puntledge summer Chinook broodstock that are held at the Upper and Lower Puntledge hatcheries are at risk of experiencing high pre-spawn mortality due to water quality problems. Both facilities rely on surface water from Puntledge River which, on average, reaches 20 ^{o}C during the summer, and can often exceed 22 ^{o}C for extended periods during warm summers. This alone can induce stress and disease problems resulting in high mortalities. Historically, summer Chinook broodstock were collected at the Upper Hatchery site where they held in earthen channels until they were spawned in October. The Upper Hatchery frequently experiences an added risk when the water

surface of Comox Lake quickly warms on hot summer days. This causes gas super-saturation in the epilimnion which drains into Puntledge River, and affects the upper hatchery water supply. In 2004, these two factors lead to the near complete mortality of all summer Chinook broodstock holding at the Upper Hatchery.

This prompted DFO Puntledge Hatchery to modify their summer Chinook broodstock collection program. Summer Chinook broodstock are now captured at the Lower Puntledge Hatchery site which is equipped with an aeration tower that maintains dissolved gases throughout the summer near 100% saturation. This change in collection sites also increases the hatchery's access to broodstock since past studies have shown that the migration success of adult chinook to the upper river (Upper Hatchery site) can be as low as 50% (Guimond and Taylor 2010).

Summer Chinook arriving at the lower hatchery between mid-May and end of June, when water temperatures are below 18 ^{o}C, can be transported to Rosewall and Big Qualicum Hatcheries. Both facilities have cooler water supplies that significantly increases survival of broodstock to the spawning stage (>95%). However, in order to take full advantage of these cool water holding facilities, adult Chinook arriving at the lower Puntledge Hatchery when temperatures are over 18 ^{o}C need to be acclimatized to a cooler holding temperature before being handled and transported. Once water temperatures at Puntledge Hatchery reach 17-18 ^{o}C, capture and transporting is stressful on the adults and can result in higher pre-spawn mortality.

1.2 Goals and Objectives

The objective of the project is to purchase the necessary equipment and complete modifications at the lower Puntledge Hatchery to accommodate a new fish brailer and chilled acclimation system for summer Chinook broodstock. This will allow hatchery staff to acclimate chinook broodstock to cooler temperatures so that they can be handled, and transported. Moving adults into the transport truck using the new fish brailer system will further reduce handling stress on the adults.

Implementation of this project will increase Chinook production, reduce the risk of selective mortality and genetic impacts due to severe temperature stress, help re-establish the differential run timing between summer and fall Chinook by reducing the differentially higher mortality rate likely experienced by earlier arriving broodstock, optimize use of an existing DFO facility and increase the rate of summer Chinook recovery.

2 STUDY AREA

The Puntledge River watershed encompasses a 600 km^2 area west of the city of Courtenay (Figure 1). The lower Puntledge River flows from Comox Lake in a north-easterly direction for 14 km where it joins with the Tsolum River. Beyond this point, the river is named Courtenay River, and flows for another 2 km into the Strait of Georgia. The lower Puntledge Hatchery is located 6.6 km upstream of the estuary. A barrier fence across the river directs migrating fish into a fishway where they may proceed further into concrete raceways in the facility, or continue their migration upstream in the river depending on the hatchery's broodstock collection requirements. Water supply for the lower hatchery is drawn directly from the BC Hydro penstock except during emergency situations and during the annual maintenance of the BC Hydro generating facility when it is pumped from the lower river.

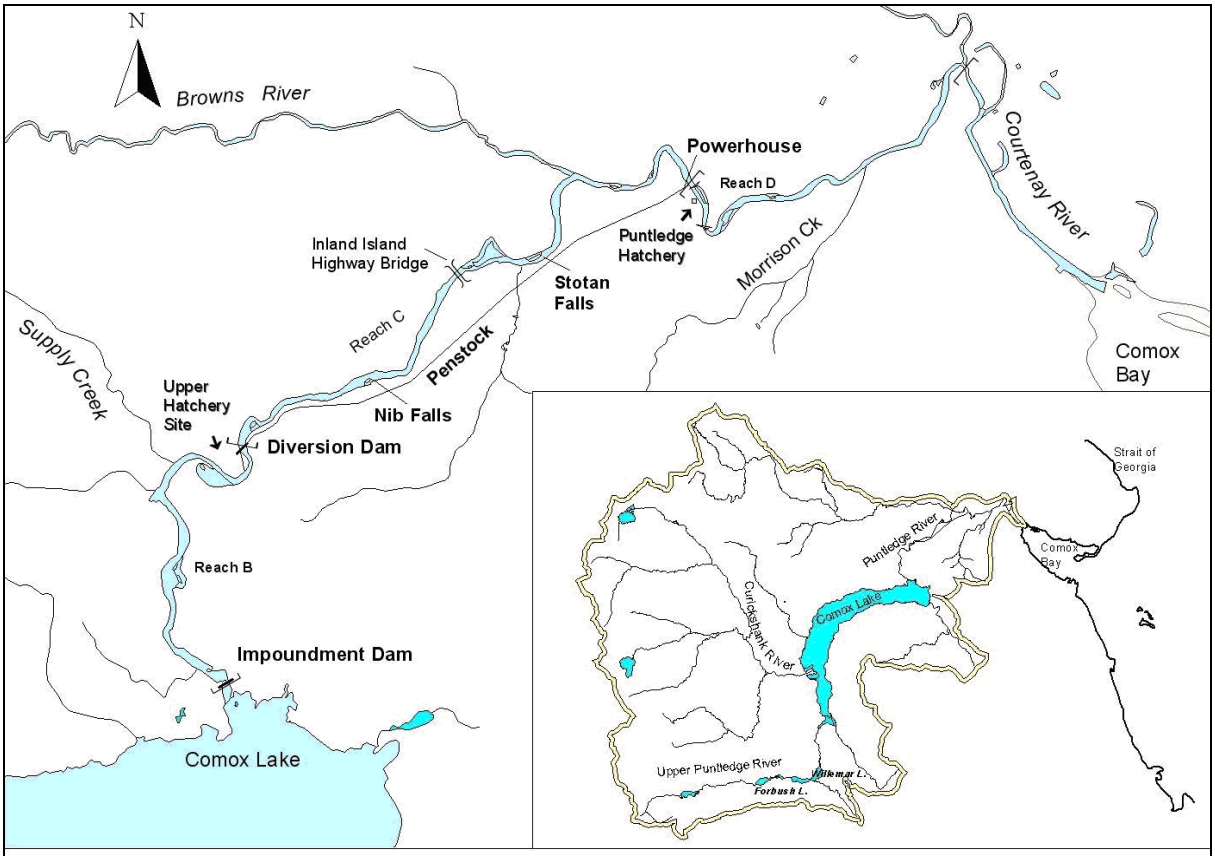

Figure 1. Puntledge River showing location of Upper and Lower Puntledge hatchery sites and other major features.

1 0 1 2 Kilometers

3 METHODS

Project Design and Planning

In February 2011, Comox Valley Project Watershed Society received conditional approval from the Fish and Wildlife Compensation Program (FWCP) for the proposal "Improving Summer Chinook Hatchery Broodstock Survival - Lower Puntledge Hatchery Chilled Acclimation System" (Project #11.PUN.01). However, FWCP recommended that the project be deferred for one year while BC Hydro and DFO were negotiating an agreement on the future operation of the Upper Puntledge Hatchery facility. This agreement was finalized in March 2012 and the project was given approval to proceed.

One of the recommendations by the FWCP Management Board in the conditional approval on project 11.PUN.01 was a review of the project budget to determine whether it could be completed at a lower cost. The deferral of the project allowed DFO staff (Puntledge Hatchery, Ecosystem Management, and Real Property, Safety and Security) to review and finalize the acclimation system design, infrastructure modifications and costs initially developed by PR Aqua (PRA), water treatment and aquaculture specialists in Nanaimo (Guimond 2011). During this review period, slight changes were made to several components of the design.

4 RESULTS AND DISCUSSION

The original design presented by PR Aqua in 2010, was to install a chilled water treatment system including pumping, gas transfer, and solids removal, to cool up to 15 m^3 of water and acclimate batches of up to 60 adults for transporting off-site (Guimond 2011). A small portion of an existing raceway would be converted as a holding/acclimation chamber and the cooled effluent water from the chamber would be discharged into the swim channel to attract adults into the acclimation chamber.

The new approach has scaled down the size of the water chiller (from 20 HP to 5 HP), and the extent of modifications required at the upper end of Raceway #1. Instead, a portable water chiller will be used to cool water within a small chamber at the head of the raceway for smaller batches of adult chinook. The chiller was purchased from Universal Marine Industries in Anmore, B.C. It is a 5 HP titanium chiller and controller, (208-230v / 3Ø) equipped for outdoor use (Figure 2; Appendix B).

Figure 2. A 5 HP titanium industrial water chiller (Ti-CHAF-10) from Universal Marine Industries.

With this design, there will be no recirculation required since adults will not remain in the acclimation chamber for extended periods. The water chiller will cool the ambient water temperature by 3 to 4 ^{o}C in the chamber when it exceeds the threshold of ~17°C for safe handling of summer broodstock. The small "acclimation" or cooling chamber is also a component of a new aluminum fish brailer that will allow the cooled fish to be anaesthetized, inspected for marks and coded wire tags (CWTs), and moved directly from the raceway into a transport tank under cooler conditions (Figure 3 & 4). This will significantly reduce the amount of stress on the fish when they are handled for transport to cool water holding facilities. The brailer was modeled after an existing unit at the Puntledge River Hatchery, but with extended height to provide the flexibility to lift fish to a higher elevation depending on the type (size/height) of transport vehicle available (Appendix C).

Figure 3. Location of the new brailer at the end of Puntledge Hatchery Raceway #1, with structural frame for hydraulic lift system.

Figure 4. New fish brailer and cooling chamber at lower Puntledge Hatchery.

This fish handling/transport method replaces an original plan to modify the hatchery raceway and an existing Pescalator™ and will result in greater flexibility of use, less structural modifications to the raceway and less stress on the fish. These design changes have also resulted in significant cost reductions overall, and greater in-kind support and investment from DFO (Appendix D). Furthermore, the use of a portable chiller will allow the hatchery to incorporate other activities into the enhancement program, such as otolith marking of summer chinook to monitor hatchery versus wild contributions to the population.

Past studies have concluded that summer Chinook arriving into the Puntledge River before July have a migration success rate of nearly 100% to the upper river (Guimond and Taylor 2010). In contrast, later migrants (July/August) have a success rate of only 50%. Based on this finding and with support from DFO-science staff, Puntledge Hatchery will now collect a higher proportion of early arriving adults for broodstock and will spawn this early component with other early fish. It is predicted that this will rebuild the early migrating component of the returns. This timing shift can be accelerated if broodstock holding and spawning survival is significantly increased at the hatchery by utilizing a chiller so that all early arriving adults can be transported to other DFO hatcheries in the Mid-Vancouver Island area which have cooler water supplies (Rosewall or Big Qualicum hatcheries). This strategy will ultimately improve summer Chinook productivity by increasing migration success to the upper river and potentially into Comox Lake. Earlier arriving hatchery returns avoid the higher river temperatures that develop later in the summer and the peak recreational use period. Early upstream migrants are also better able to utilize the tail-end of spring freshet flows for upstream migration.

5 ACKNOWLEDGEMENTS

This project was made possible through the financial support of the B.C. Hydro Fish and Wildlife Compensation Program (FWCP) on behalf of its program partners BC Hydro, the Province of BC and Fisheries and Oceans Canada (DFO), as well as in-kind contributions from DFO. Special thanks to Darcy Miller (Puntledge Hatchery Manager) and James Campbell (Puntledge Hatchery Maintenance Superintendent) for overseeing the project design and installation.

6 REFERENCES

B.C. Hydro. 2011. Fish and Wildlife Compensation Program – Puntledge River Watershed Salmonid Action Plan. Final Draft. [online] URL: http://www.bchydro.com/about/our_commitment/compensation_programs/funding_donations.html

Guimond, E. 2011. Improving summer Chinook hatchery broodstock survival – lower Puntledge Hatchery chiller design and detailed cost estimate. Project # 10.Pun.04. Prepared for Comox Valley Project Watershed Society and BC Hydro BCRP.

Guimond, E. and M. Sheng. 2009. Puntledge River enhancement activities at the Upper Hatchery: past, present and future. Prepared for BC Hydro, John Hart Generating Station, Campbell River, BC.

Guimond, E. and J.A. Taylor. 2010. Puntledge River radio telemetry study on summer Chinook migration in the upper watershed 2009 Project #09.Pun.04. Prepared for Comox Valley Project Watershed Society and BC Hydro BCRP.

APPENDICES

APPENDIX A: Confirmation of BCRP Recognition

Article in local newspapers (Comox Valley Echo February 22, 2013).

News

New hatchery fish lift system is really cool

When it comes to fish lifts, the one going in at the DFO's Puntledge River Hatchery is really cool - literally.

With funding from B.C. Hydro's Fish and Wildlife Compensation Program, and administrative support from Comox Valley Project Watershed Society, the hatchery is installing a new water chiller and brailer system - a dewatering lift - to help improve the recovery of summer-run chinook salmon.

Because of the risks associated with holding salmon in high water temperatures in summer, the hatchery has made changes to its summer chinook and coho production programs, and that work is being supported by B.C. Hydro grants totaling just under $245,000.

The health of salmon broodstock can decline rapidly when fish are handled in water temperatures that are above 18 degrees Celsius.

The new chiller will allow hatchery staff to cool the river water for the sorting system in which summer chinook broodstock are anesthetized and handled.

Once cooled, the broodstock can be transported to other DFO hatcheries in the Mid-Vancouver Island area that have cooler water supplies, to be held there until spawning time in the fall.

According to Darcy Miller, watershed enhancement manager of Puntledge River Hatchery, "this strategy will double the number of adults that survive to spawn and will also improve the health and survival of their gametes (eggs and sperm) and juvenile offspring."

Also being added to the hatchery are new rearing tanks, an aeration tower, and other infrastructure to accommodate the rearing of 1.25 million summer chinook fry, which are released in the spring before river temperatures get warm.

This expansion follows several years of discussions and negotiations between DFO and B.C. Hydro on the 2012 decommissioning of the Upper Puntledge Hatchery facility, off Forbidden Plateau Rd.

This year, all the associated fish production formerly conducted at the Upper Hatchery is being moved to the Lower Puntledge Hatchery on Powerhouse Road.

The Upper Hatchery was constructed in 1965 by B.C. Hydro as compensation for impacts on summer chinook and steelhead populations following expansion of the hydro facilities on the Puntledge River in the 1950s.

DFO staff historically operated the facility for the capture of returning adult summer chinook salmon for their hatchery-based breeding and rearing programs of juvenile coho, steelhead and summer chinook salmon.

Another change being implemented is the releasing of coho fry (two-three months old) into the upper watershed instead of waiting and releasing the fish as smolts (18 months old).

This eliminates the need to hold coho juveniles in the hatchery throughout their first summer, when high water temperatures can often compromise fish health.

By consolidating all production at the Lower Hatchery, operational efficiencies as well as variable production strategies are being achieved while still targeting the same annual salmon production numbers. In addition, operating costs will be reduced and other risks will be reduced for both DFO and B.C. Hydro.

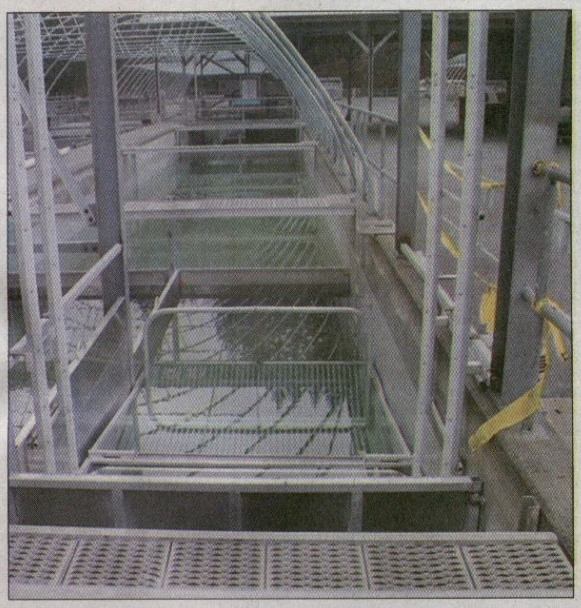

The new infrastructure being installed at Puntledge Hatchery.

Chinook mingling in a Puntledge River Hatchery raceway.

Any new strategy must be economical and biologically sound to be deemed beneficial. One of DFO's conditions for this new salmon production strategy is a long-term assessment over four-six years of chinook and coho smolt migration and survival above the diversion dam, and homing of adult hatchery returns into Comox Lake.

These monitoring programs are expected to be implemented with further funding from B.C. Hydro's Fish and Wildlife Compensation Program being applied in the Puntledge Watershed over the next few years.

Paul Horgen, Chair of Project Watershed Society is optimistic about the outcomes. "This project is one of several that the Society has managed on the Puntledge River, and we are hopeful that the Puntledge River salmon runs will continue to see improvements".

APPENDIX B: Puntledge Hatchery Chiller Drawing – Universal Marine Industries

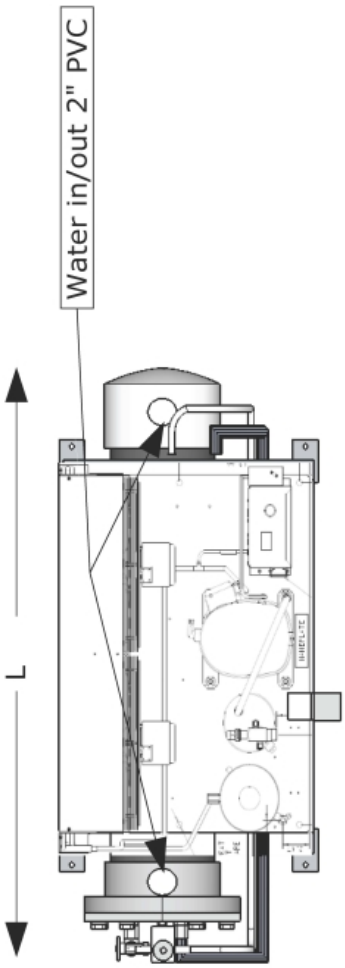

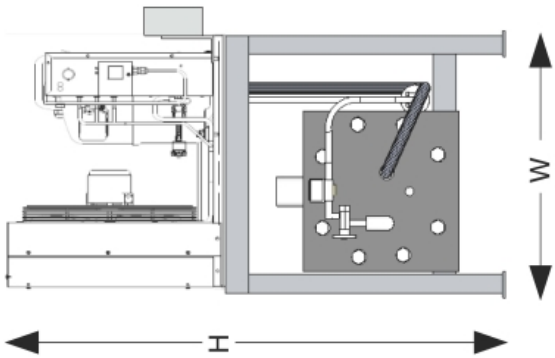

Ti-CHAF Industrial Chiller Specifications

Model #	Nominal HP	Electrical							Nominal Flow Rate US GPM 2	Ship Wt (lbs)	Dimensions 3
		Phase					Fuse or HACR Circuit Breaker				
		Hertz		RLA	LRA	Min Circuit Ampacity Amperes	Min Amps	Max Amps			
		Volts									L" x W" x H"
Ti-CHAF-06	1.5	1-60-208-230		10.7	50	13	20	20	50-100	350	36"x24"x42"
Ti-CHAF-07	2	1-60-208-230		13.2	61	16	20	25	50-100	350	36"x24"x42"
Ti-CHAF-08	3	1-60-208-230		18	95	22	30	35	50-100	410	48"x28"x45"
Ti-CHAF-08	3	3-60-208-230		12	77	14	20	20	50-100	410	48"x28"x45"
Ti-CHAF-09	4	1-60-208-230		24	131	29	35	50	50-100	480	48"x28"x45"
Ti-CHAF-09	4	3-60-208-230		16	82	20	25	30	50-100	480	48"x28"x45"
Ti-CHAF-09	4	3-60-460		8	41	10	15	15	50-100	480	48"x28"x45"
Ti-CHAF-09	4	3-60-575		6	36	8	15	15	50-100	480	48"x28"x45"
Ti-CHAF-10	5	1-60-208-230		31	169	39	50	60	50-100	540	60"x31"x51"
Ti-CHAF-10	5	3-60-208-230		19	150	24	30	40	50-100	540	60"x31"x51"
Ti-CHAF-10	5	3-60-460		11	73	13	20	20	50-100	540	60"x31"x51"
Ti-CHAF-10	5	3-60-575		9	59	12	15	15	50-100	540	60"x31"x51"
Ti-CHAF-11	7.5	3-60-208-230		28	196	35	50	50	50-100	890	72"x34"x63"
Ti-CHAF-11	7.5	3-60-460		14	100	17	30	30	50-100	890	72"x34"x63"
Ti-CHAF-11	7.5	3-60-575		10	90	12	20	20	50-100	890	72"x34"x63"

1. Specifications subject to change without notice. Dimensions available on request.
2. Flow rate requirements are relative to water temperature. As a rule, colder water requires higher flow.
3. Dimensions may vary, if size is critical please contact UMI to discuss options.

UMI INTER-OCEAN ENTERPRISES, INC.

Ti-CHAF 1.5 - 7.5 HP
Universal Marine Industries
2790 Sunnyside Rd, Anmore BC V3H3C8 Canada Ph: 604-469-2427

drawn by: EK
06/07/09

APPENDIX C: Puntledge Hatchery Brailer Structural Frame Drawing - Grey Rock Welding.

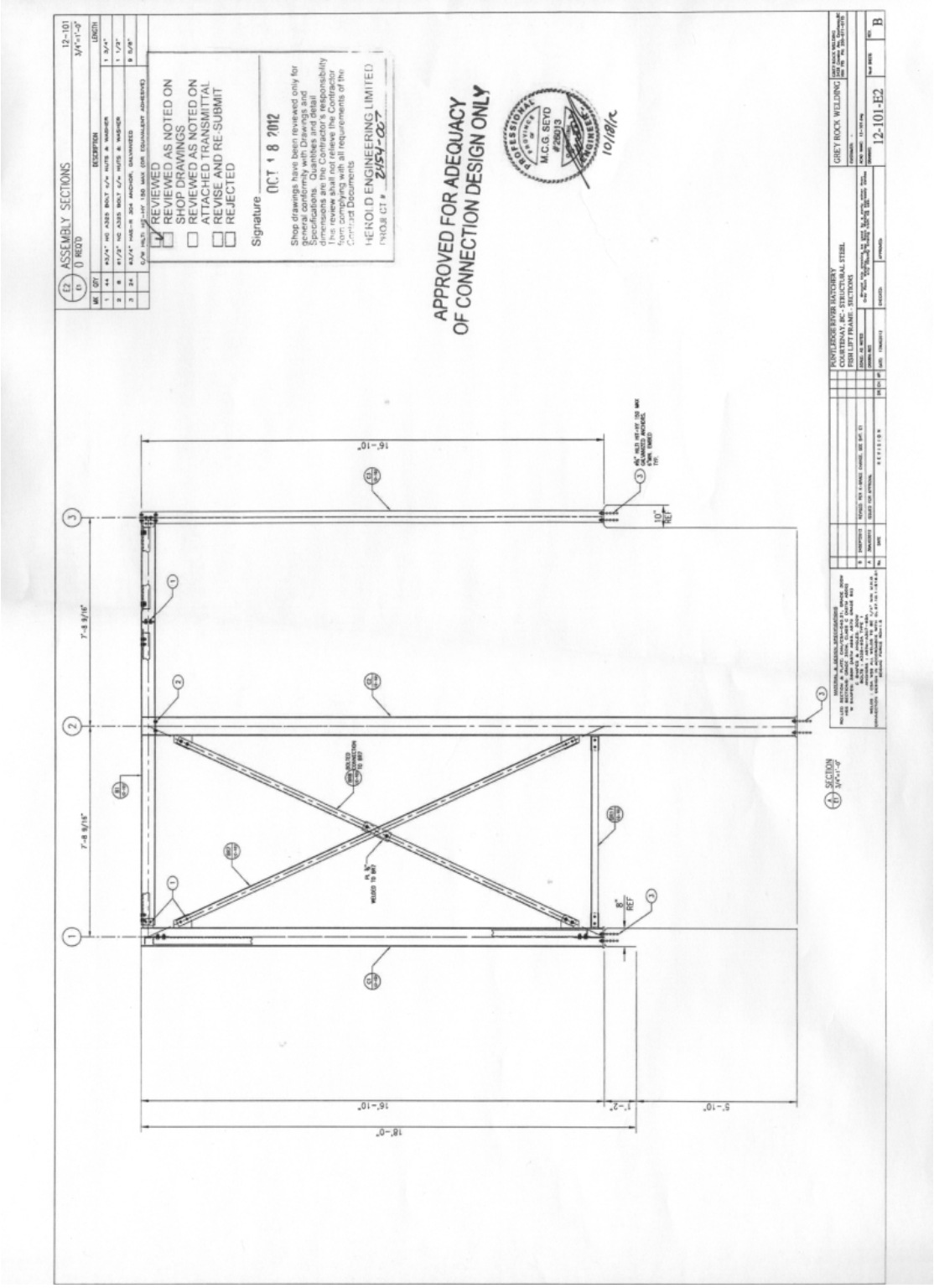

APPENDIX D: FWCP Financial Statement

Project #: 11.PUN.01

INCOME	BUDGET			ACTUAL		
	FWCP	Other (Cash)	Other (in-kind)	FWCP	Other (cash)	Other (in-kind)
Total by Source	$93,720	$0	$16,654	$93,720	$0	$16,830
Grand Total Income (FWCP + Other)	**$110,374.00**			**$110,550.00**		
EXPENSES						
Project Personnel						
Project Coordinator	$2,250.00			$2,273.60		
DFO (Electrician & Engineer)			$6,640			
DFO (Hatchery personnel)			$3,500			$4,000.00
Communications	$450.00			$403.20		
Material and Equipment						
Water chiller & delivery	$13,000.00			$11,233.60		$1,000.00
Fish brailer	$60,500.00			$62,286.01		$4,400.00
Misc. hydraulic parts for brailer	$3,500.00		$3,000.00	$4,782.40		$2,000.00
Electrical hook-up (brailer and chiller)	$3,200.00		$2,000.00	$4,216.80		$3,900.00
Enclosure	$2,300.00					
Administration						
Admin Fees (10%)	$8,520.00		$1,514.00	$8,519.56		$1,530.00
Total Expenses	**$93,720.00**		**$16,654**	**$93,715.17**	**$0**	**$16,830**
Grand Total Expenses (FWCP + others)	**$110,374.00**			**$110,545.17**		
Balance (Grand Total Income - Grand Total Expenses	**$0.00**			**$4.83**		